PASTERNACK
an INFINITE brand

Reverse Polarity TNC Male to TNC Female Bulkhead Low Loss Cable 100 cm Length Using LMR-195 Coax

RF Cable Assemblies Technical Data Sheet PE3W08762-100CM

Configuration

- Connector 1: TNC Male Reverse Polarity
- Connector 2: TNC Female Bulkhead
- Cable Type: LMR-195

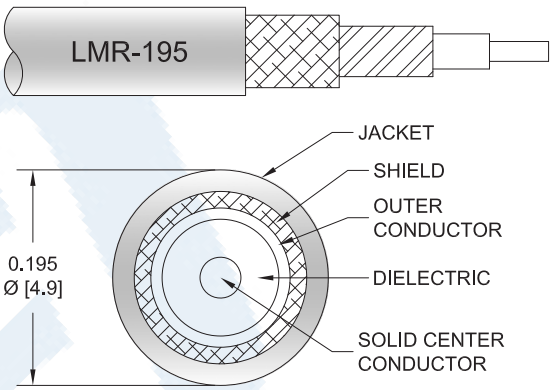

Features

- Max Frequency 4 GHz
- Shielding Effectivity > 90 dB
- 80% Phase Velocity
- Double Shielded
- PE Jacket

Applications

- General Purpose
- Laboratory Use

Description

Pasternack's PE3W08762-100CM reverse polarity TNC male to TNC female bulkhead 100 cm cable using LMR-195 coax is part of our full line of RF components available for same-day shipping. Pasternack's flexible RF cable assemblies are ideal for applications where tight bends and flexure are required. This Pasternack reverse polarity TNC to TNC cable assembly has a male to female gender configuration with 50 ohm flexible LMR-195 coax. The PE3W08762-100CM reverse polarity TNC male to TNC female cable assembly operates to 4 GHz. Our RF cable assembly with TNC bulkhead interface allows designers to create external connections on their product enclosures, and can be used in a variety of other rack mount and panel mount applications. The double shielding of this Pasternack cable assembly provides excellent shielding effectiveness of better than 90 dB.

Custom versions of most RF cable assemblies can be built and shipped same day. Custom cable assembly lengths can be obtained by specifying the desired length on the web site at time of order or by contacting a sales representative. Other available RF cable assembly value added services include connector orientation or clocking, heat shrink booting and custom labeling. RF testing can also be performed to document the electrical performance of your cable assembly.

Click the following link (or enter part number in "SEARCH" on website) to obtain additional part information including price, inventory and certifications: Reverse Polarity TNC Male to TNC Female Bulkhead Low Loss Cable 100 cm Length Using LMR-195 Coax PE3W08762-100CM

Pasternack Enterprises, Inc. • P.O. Box 16759, Irvine, CA 92623
Phone: (866) 727-8376 or (949) 261-1920 • **Fax:** (949) 261-7451
Sales@Pasternack.com • Techsupport@Pasternack.com

© 2019 Pasternack Enterprises All Rights Reserved

PASTERNACK
an INFINITE brand

Reverse Polarity TNC Male to TNC Female Bulkhead Low Loss Cable 100 cm Length Using LMR-195 Coax

RF Cable Assemblies Technical Data Sheet PE3W08762-100CM

Electrical Specifications

Description	Minimum	Typical	Maximum	Units
Frequency Range	DC		4	GHz
VSWR			1.5:1	
Velocity of Propagation		80		%
RF Shielding	90			dB
Group Delay		1.27 [4.17]		ns/ft [ns/m]
Capacitance		25.4 [83.33]		pF/ft [pF/m]
Inductance		0.064 [0.21]		uH/ft [uH/m]
DC Resistance Inner Conductor		7.6 [24.93]		Ω/1000ft [Ω/Km]
DC Resistance Outer Conductor		4.9 [16.08]		Ω/1000ft [Ω/Km]
Jacket Spark			3,000	Vrms

Specifications by Frequency

Description	F1	F2	F3	F4	F5	Units
Frequency	0.1	0.25	0.5	1	4	GHz
Insertion Loss (Max.)	0.32	0.39	0.47	0.59	0.99	dB

Electrical Specification Notes:
The Insertion Loss data above is based on the performance specifications of the coax cable and connectors used in this assembly. The Insertion Loss is estimated as 0.1 dB per TNC male and TNC female bulkhead connector.

Mechanical Specifications

Cable Assembly

Length*	39.37 in [100 cm]
Diameter	0.689 in [17.5 mm]

Cable

Cable Type	LMR-195
Impedance	50 Ohms
Inner Conductor Type	Solid
Inner Conductor Material and Plating	Copper
Dielectric Type	PE (F)
Number of Shields	2
Shield Layer 1	Aluminum Tape
Shield Layer 2	Tinned Copper Braid
Jacket Material	PE, Black
Jacket Diameter	0.195 in [4.95 mm]

Click the following link (or enter part number in “SEARCH” on website) to obtain additional part information including price, inventory and certifications: Reverse Polarity TNC Male to TNC Female Bulkhead Low Loss Cable 100 cm Length Using LMR-195 Coax PE3W08762-100CM

Pasternack Enterprises, Inc. • P.O. Box 16759, Irvine, CA 92623
Phone: (866) 727-8376 or (949) 261-1920 • **Fax:** (949) 261-7451
Sales@Pasternack.com • Techsupport@Pasternack.com

© 2019 Pasternack Enterprises All Rights Reserved

Reverse Polarity TNC Male to TNC Female Bulkhead Low Loss Cable 100 cm Length Using LMR-195 Coax

One Time Minimum Bend Radius	0.5 in [12.7 mm]
Repeated Minimum Bend Radius	2 in [50.8 mm]
Bending Moment	0.2 lbs-ft [0.27 N-m]
Flat Plate Crush	15 lbs/in [0.27 Kg/mm]
Tensile Strength	40 lbs [18.14 Kg]

Connectors

Description	Connector 1	Connector 2
Type	TNC Male Reverse Polarity	TNC Female Bulkhead
Specification		MIL-STD-348A
Impedance	50 Ohms	50 Ohms
Contact Material and Plating	Brass, Gold	Brass, Gold
Contact Plating Specification	30 µinches minimum	30 µin minimum
Dielectric Type	Teflon	PTFE
Outer Conductor Material and Plating	Brass, Nickel	Brass, Nickel
Body Material and Plating	Brass, Nickel	Brass, Nickel
Body Plating Specification	100 µinches minimum	100 µin minimum
Seal Gasket Material	Silicone	Silicone

Environmental Specifications

Temperature

Operating Range	-40 to +85 deg C

Compliance Certifications (see product page for current document)

Plotted and Other Data

Notes:

Click the following link (or enter part number in “SEARCH” on website) to obtain additional part information including price, inventory and certifications: Reverse Polarity TNC Male to TNC Female Bulkhead Low Loss Cable 100 cm Length Using LMR-195 Coax PE3W08762-100CM

Pasternack Enterprises, Inc. • P.O. Box 16759, Irvine, CA 92623
Phone: (866) 727-8376 or (949) 261-1920 • **Fax:** (949) 261-7451
Sales@Pasternack.com • Techsupport@Pasternack.com

© 2019 Pasternack Enterprises All Rights Reserved

Reverse Polarity TNC Male to TNC Female Bulkhead Low Loss Cable 100 cm Length Using LMR-195 Coax

How to Order

Part Number Configuration: **PE3W08762 - xx uu**

- uu: Unit of Measure: cm = Centimeters; <blank> = Inches
- xx: Length
- PE3W08762: Base Number

Example: PE3W08762-12 = 12 inches long cable
PE3W08762-100cm = 100 cm long cable

Reverse Polarity TNC Male to TNC Female Bulkhead Low Loss Cable 100 cm Length Using LMR-195 Coax from Pasternack Enterprises has same day shipment for domestic and International orders. Our RF, microwave and millimeter wave products maintain a 99.4% availability and are part of the broadest selection in the industry.

Click the following link (or enter part number in “SEARCH” on website) to obtain additional part information including price, inventory and certifications: Reverse Polarity TNC Male to TNC Female Bulkhead Low Loss Cable 100 cm Length Using LMR-195 Coax PE3W08762-100CM

URL: https://www.pasternack.com/tnc-male-tnc-female-lmr195-cable-assembly-pe3w08762-100cm-p.aspx

The information contained in this document is accurate to the best of our knowledge and representative of the part described herein. It may be necessary to make modifications to the part and/or the documentation of the part, in order to implement improvements. Pasternack reserves the right to make such changes as required. Unless otherwise stated, all specifications are nominal. Pasternack does not make any representation or warranty regarding the suitability of the part described herein for any particular purpose, and Pasternack does not assume any liability arising out of the use of any part or documentation.

Pasternack Enterprises, Inc. • P.O. Box 16759, Irvine, CA 92623
Phone: (866) 727-8376 or (949) 261-1920 • **Fax:** (949) 261-7451
Sales@Pasternack.com • Techsupport@Pasternack.com

© 2019 Pasternack Enterprises All Rights Reserved

PE3W08762-100CM CAD Drawing

Reverse Polarity TNC Male to TNC Female Bulkhead Low Loss Cable 100 cm Length Using LMR-195 Coax

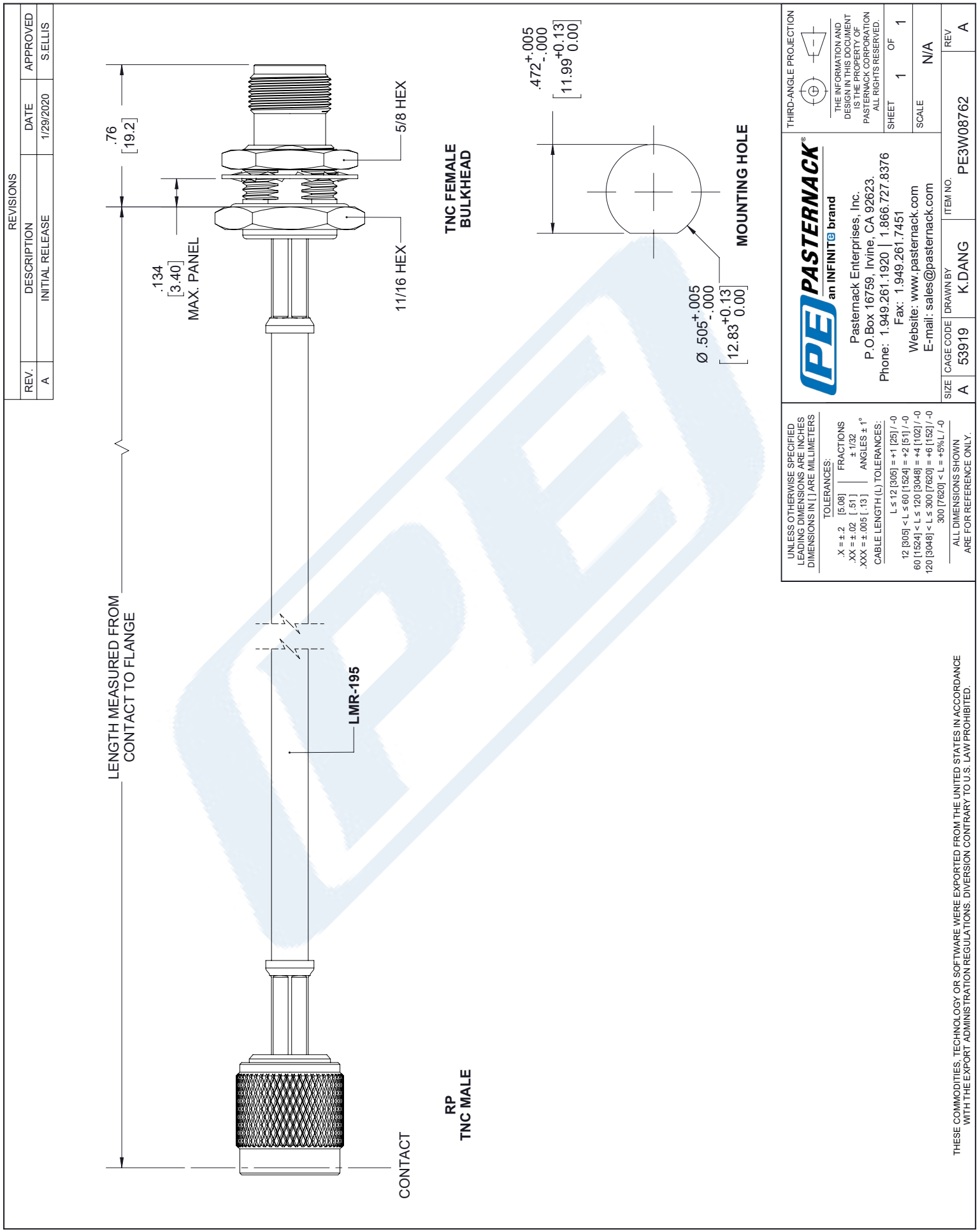

© 2019 Pasternack Enterprises All Rights Reserved